1

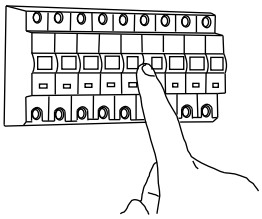

TURN OFF POWER

Couper Le Courant! / Spegnere La Corrente! / Strom Abshalten!

2

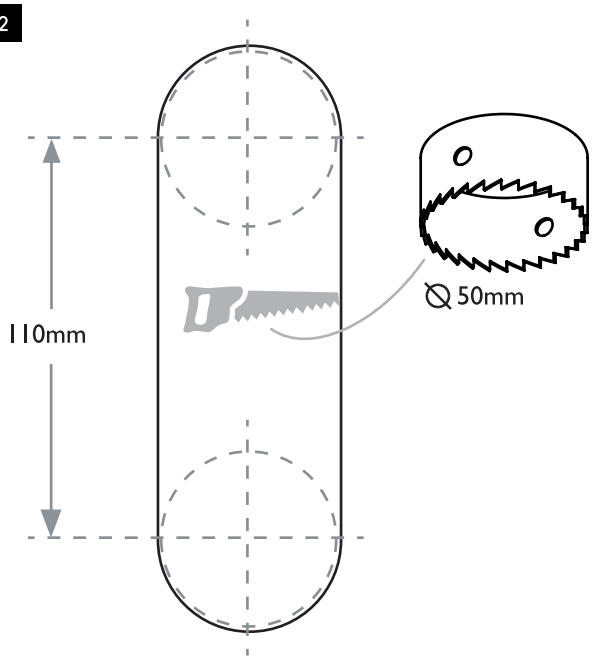

3

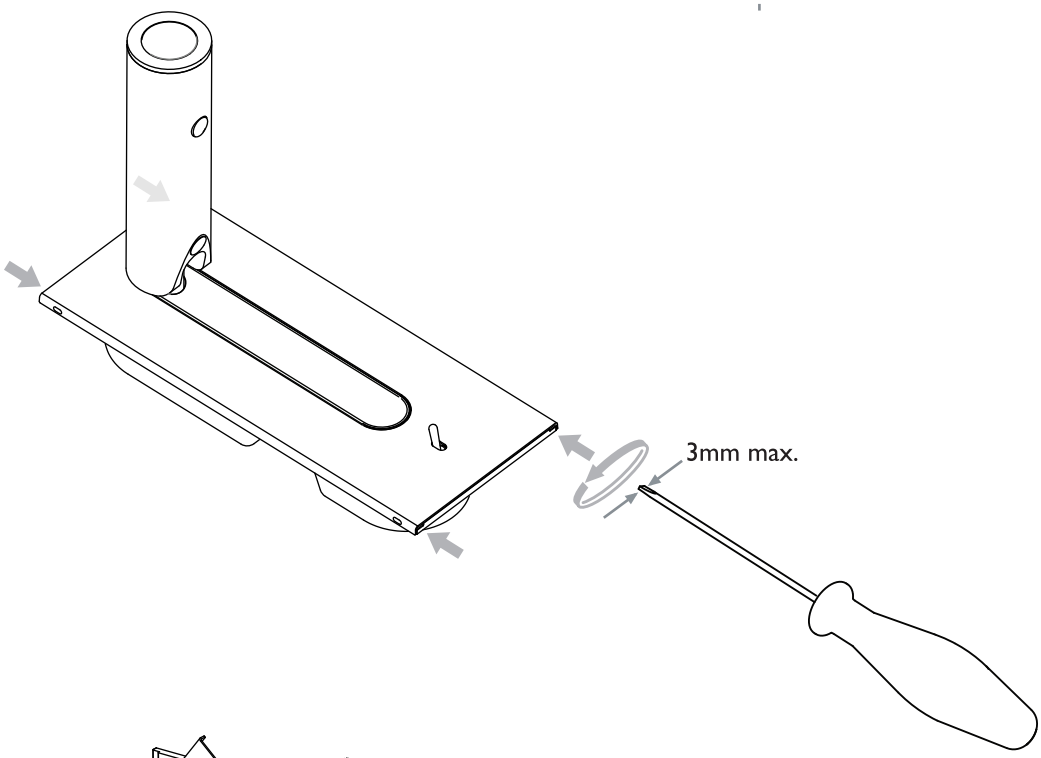

4

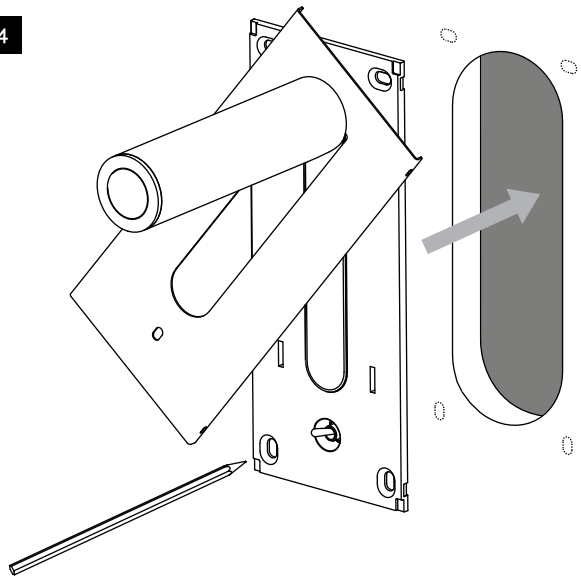

5

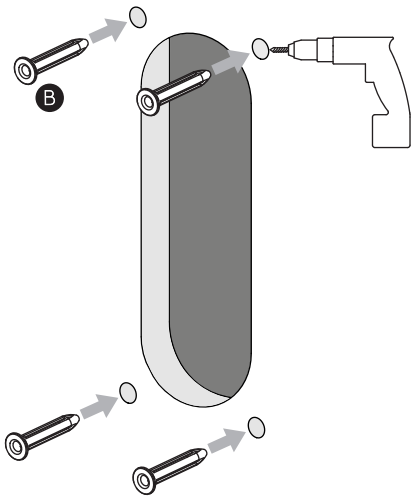
B

6

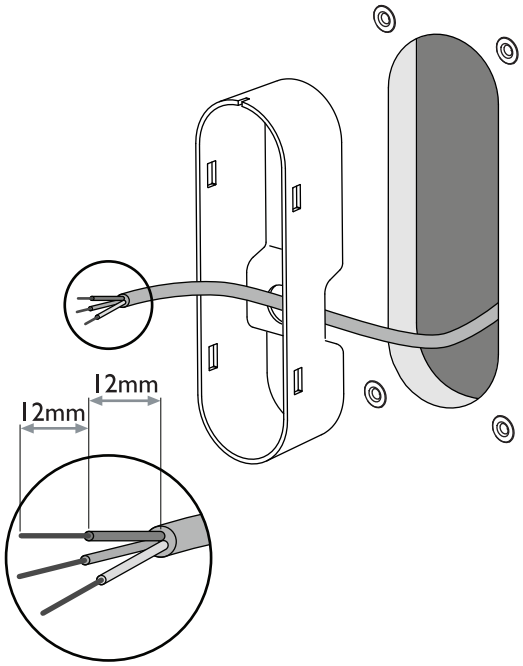
12mm
12mm

7

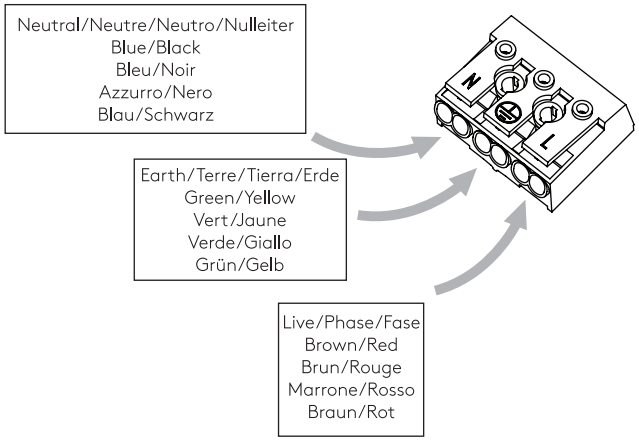
Neutral/Neutre/Neutro/Nulleiter
Blue/Black
Bleu/Noir
Azzurro/Nero
Blau/Schwarz
Earth/Terre/Tierra/Erde
Green/Yellow
Vert/Jaune
Verde/Giallo
Grün/Gelb
Live/Phase/Fase
Brown/Red
Brun/Rouge
Marrone/Rosso
Braun/Rot
N
L

8

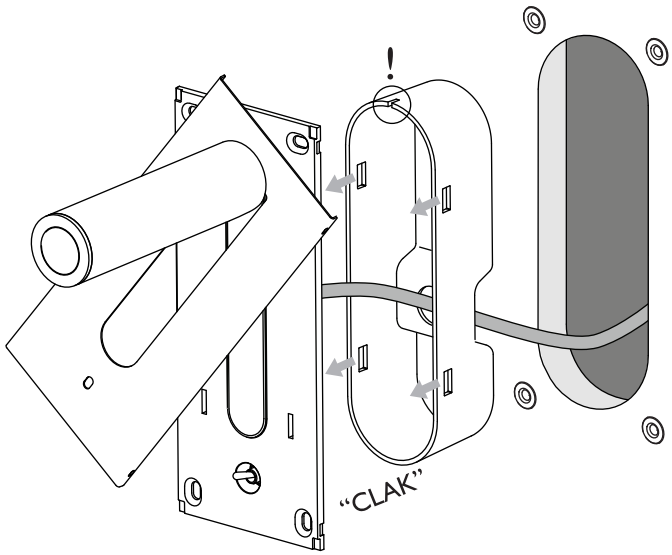
!
"CLAK"

9

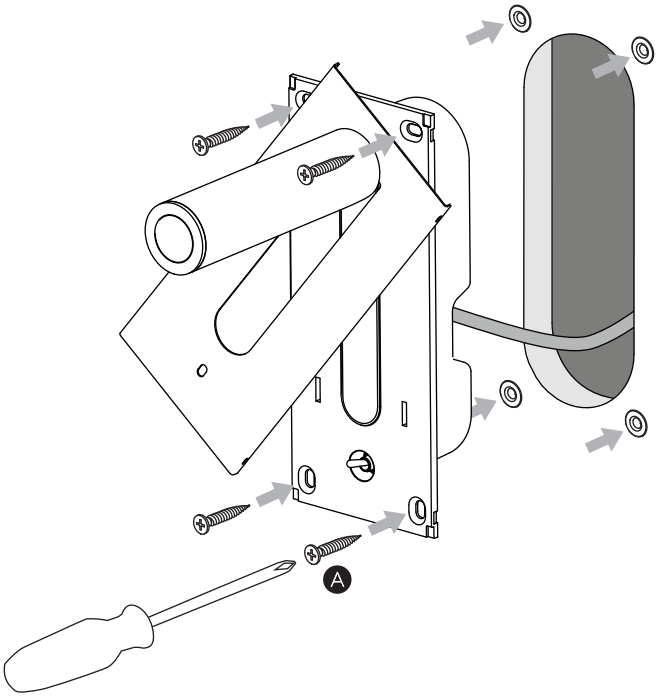
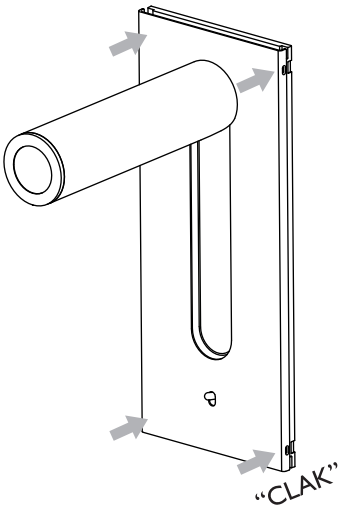
10