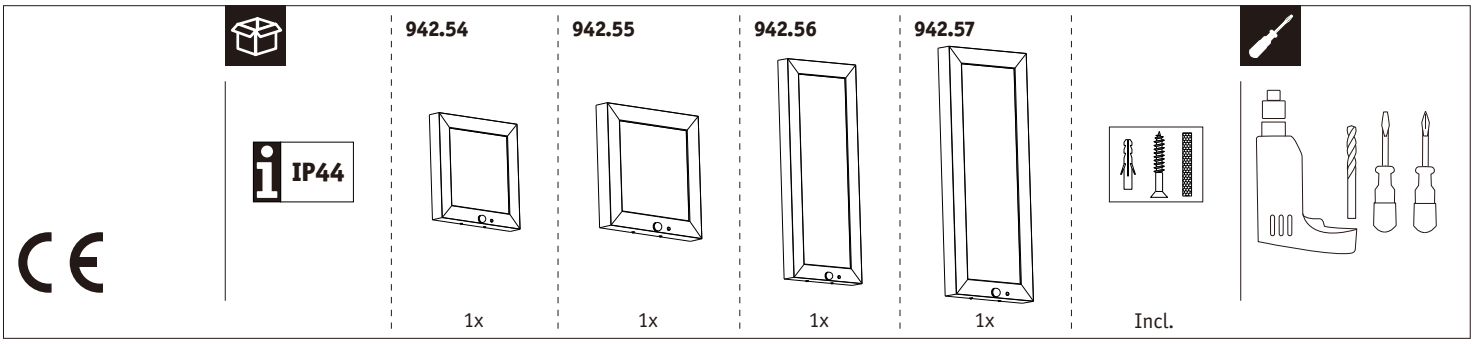
IP44
942.54
942.55
942.56
942.57
1x
1x
1x
1x
Incl.

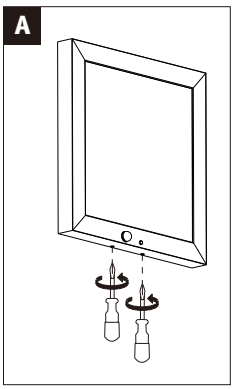
A

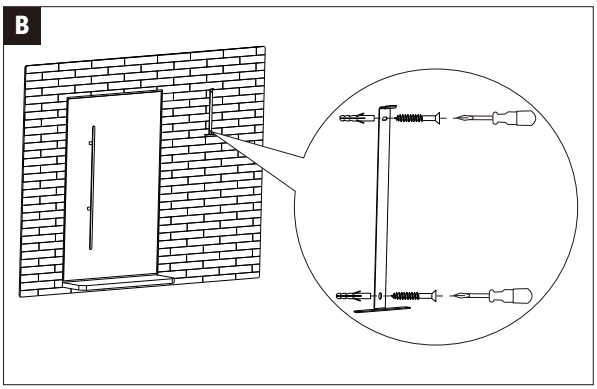
B

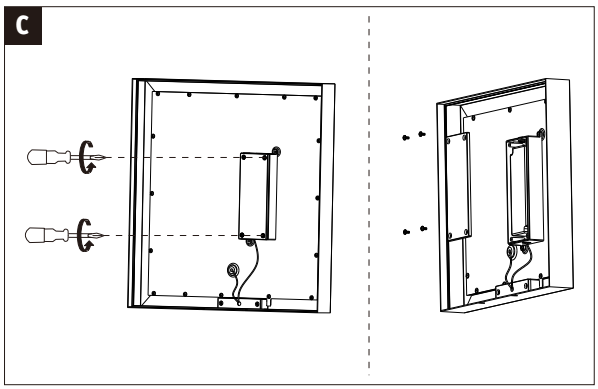
C

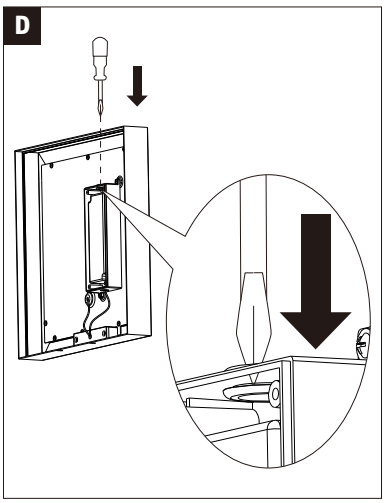
D

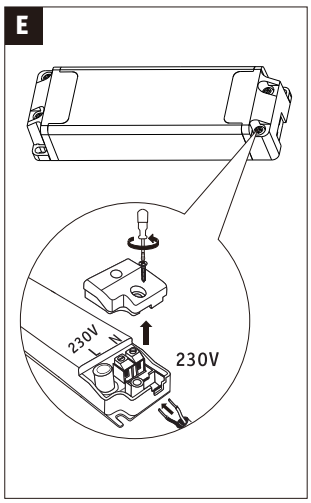
E
230V
L
N
230V

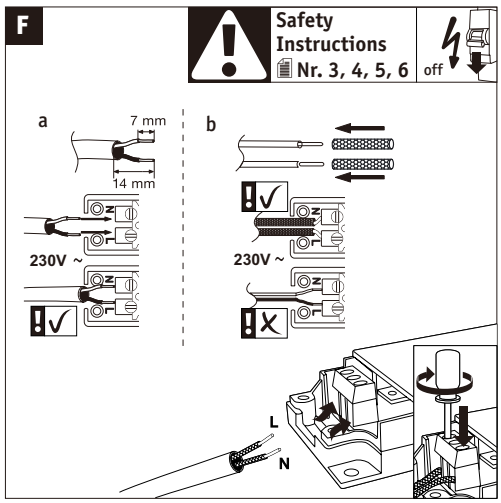
F
Safety
Instructions
Nr. 3, 4, 5, 6
off
a
7 mm
14 mm
230V ~
b
230V ~
L
N

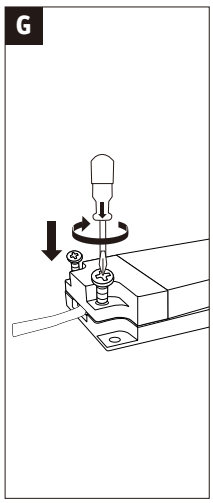
G

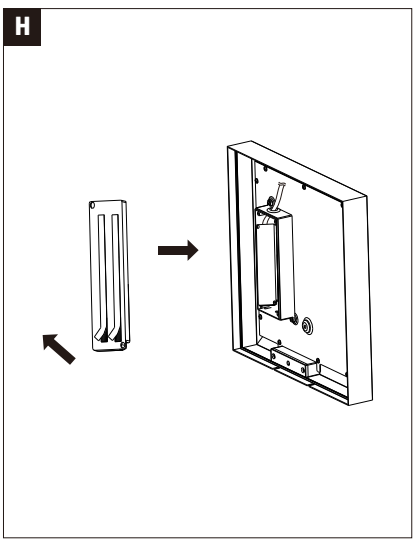
H

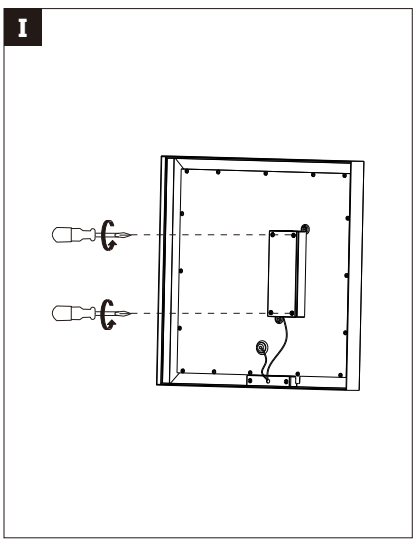
I

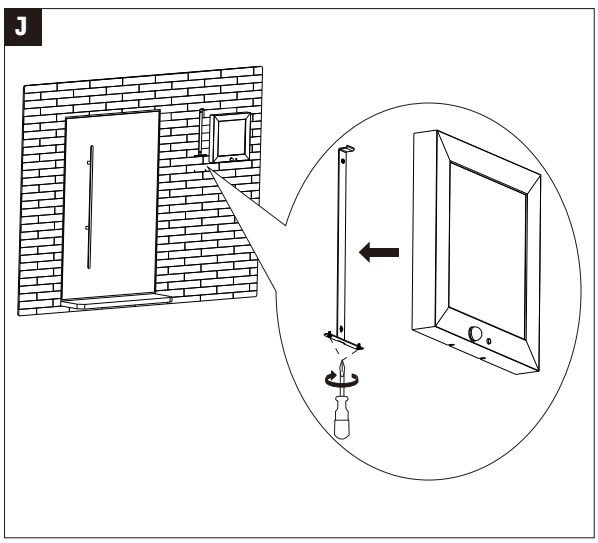
J

K

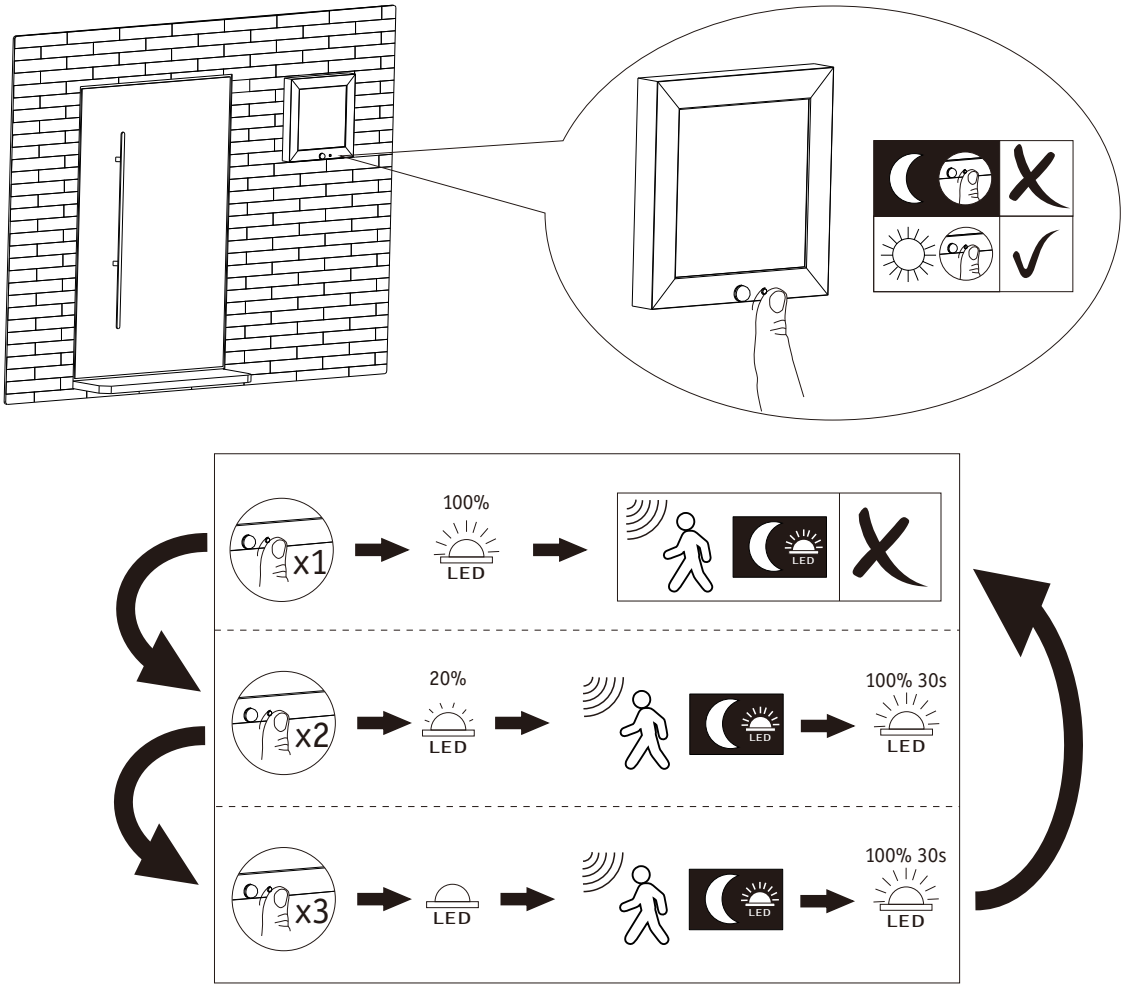
on
x1
100%
LED
LED
x2
20%
LED
LED
100% 30s
LED
x3
LED
LED
100% 30s
LED

L

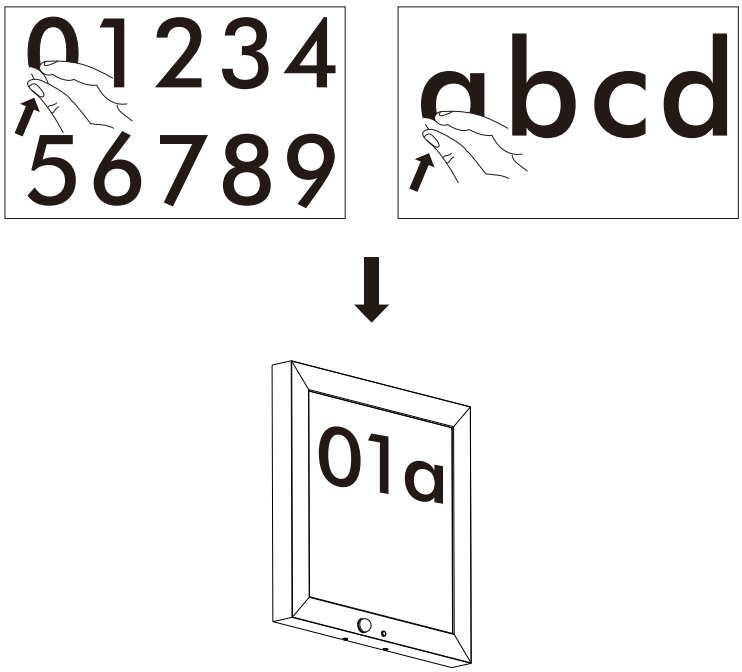
01234
56789
abcd
01a

M

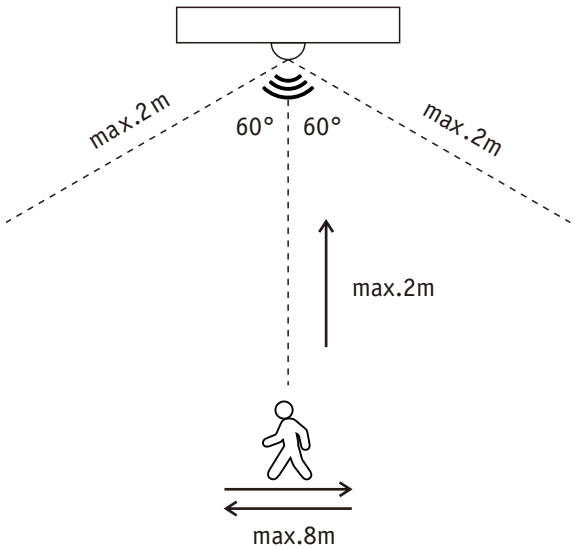
max.2m
60°
60°
max.2m
max.2m
max.8m